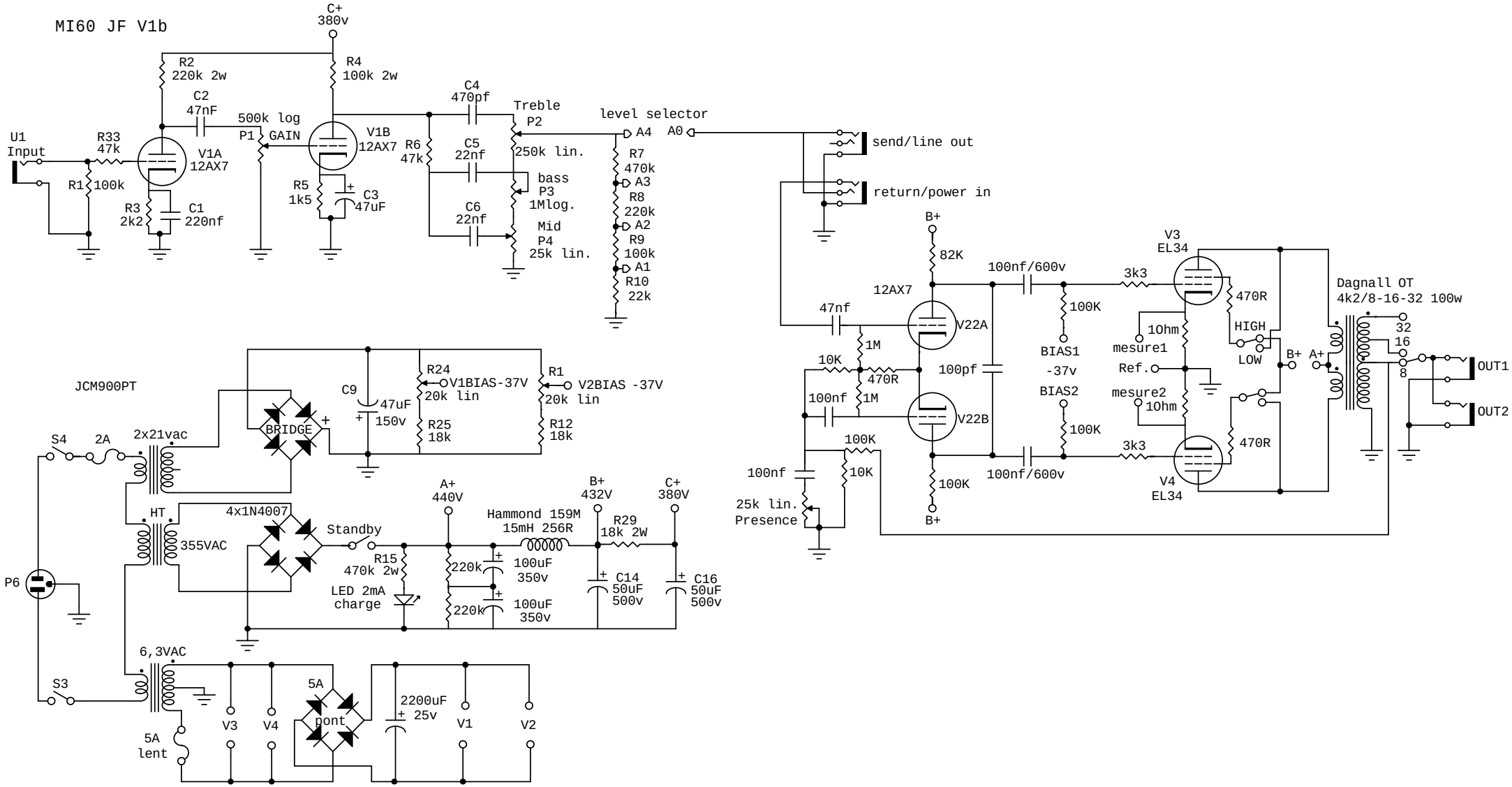
MI60 JF V1b
C+
380v
R2
220k 2w
R4
100k 2w
C2
47nF
500k log
P1
GAIN
U1
Input
R33
47k
V1A
12AX7
R1
100k
R3
2k2
C1
220nf
V1B
12AX7
R5
1k5
C3
47uF
R6
47k
C4
470pf
C5
22nf
C6
22nf
Treble
P2
250k lin.
bass
P3
1Mlog.
Mid
P4
25k lin.
level selector
A4
A0
R7
470k
A3
R8
220k
A2
R9
100k
A1
R10
22k
send/line out
return/power in
B+
82K
12AX7
V22A
47nf
1M
10K
470R
100nf
1M
V22B
100K
10K
100nf
25k lin.
Presence
100nf/600v
100pf
100K
BIAS1
-37v
BIAS2
100K
100nf/600v
3k3
V3
EL34
470R
10hm
mesure1
Ref.
mesure2
10hm
HIGH
LOW
470R
3k3
V4
EL34
Dagnall OT
4k2/8-16-32 100w
32
16
8
B+
A+
OUT1
OUT2
JCM900PT
S4
2A
2x21vac
BRIDGE
C9
47uF
150v
R24
V1BIAS-37V
20k lin
R25
18k
R1
V2BIAS -37V
20k lin
R12
18k
HT
355VAC
4x1N4007
Standby
R15
470k 2w
LED 2mA
charge
A+
440V
220k
220k
100uF
350v
100uF
350v
Hammond 159M
15mH 256R
B+
432V
R29
18k 2W
C14
50uF
500v
C+
380V
C16
50uF
500v
P6
6,3VAC
S3
5A
lent
V3
V4
5A
pont
2200uF
25v
V1
V2